Technical Data

2 columns

Height H (mm)	Tappings centre I (mm)	Empty weight (kg)	Water content (l)	Heat output Δt 50° (W)	Heat output Δt 30° (W)
300	230	0,5	0,4	**24,3**	**12,9**
350	280	0,6	0,5	**27,7**	**14,7**
400	330	0,6	0,5	**31,1**	**16,4**
450	380	0,7	0,6	**34,6**	**18,3**
500	430	0,8	0,6	**38,0**	**20,0**
550	480	0,9	0,7	**41,4**	**21,8**
600	530	0,9	0,7	**44,8**	**23,5**
750	680	1,1	0,8	**55,0**	**28,7**
800	730	1,2	0,8	**58,4**	**30,5**
900	830	1,4	0,9	**65,1**	**33,9**
1000	930	1,5	1,0	**72,1**	**37,4**
1100	1030	1,6	1,1	**78,9**	**40,9**
1200	1130	1,8	1,1	**85,6**	**44,2**
1500	1430	2,2	1,4	**106,4**	**54,6**
1800	1730	2,6	1,6	**127,7**	**65,0**
2000	1930	2,9	1,7	**142,3**	**72,5**
2200	2130	3,2	1,9	**157,2**	**80,1**
2500	2430	3,6	2,1	**180,1**	**91,8**
2800	2730	4,0	2,3	**203,9**	**104,0**
3000	2930	4,3	2,4	**217,9**	**111,1**

3 columns

Height H (mm)	Tappings centre I (mm)	Empty weight (kg)	Water content (l)	Heat output Δt 50° (W)	Heat output Δt 30° (W)
300	230	0,5	0,6	**33,1**	**17,5**
350	280	0,7	0,7	**37,7**	**19,9**
400	330	0,8	0,7	**42,3**	**22,3**
450	380	0,9	0,8	**47,0**	**24,7**
500	430	1,0	0,8	**51,6**	**27,1**
550	480	1,2	0,9	**56,2**	**29,6**
600	530	1,3	1,0	**60,8**	**31,9**
750	680	1,4	1,1	**74,5**	**38,9**
800	730	1,8	1,2	**79,1**	**41,3**
900	830	1,7	1,3	**88,2**	**45,9**
1000	930	2,1	1,4	**97,4**	**50,6**
1100	1030	2,3	1,5	**106,7**	**55,5**
1200	1130	2,5	1,6	**116,0**	**60,0**
1500	1430	2,7	2,0	**144,4**	**74,3**
1800	1730	3,3	2,3	**173,6**	**88,7**
2000	1930	4,0	2,6	**193,7**	**99,0**
2200	2130	4,4	2,8	**214,2**	**109,6**
2500	2430	4,8	3,2	**246,0**	**126,1**
2800	2730	5,3	3,6	**279,0**	**143,2**
3000	2930	6,0	3,8	**301,8**	**155,1**

4 columns

Height H (mm)	Tappings centre I (mm)	Empty weight (kg)	Water content (l)	Heat output Δt 50° (W)	Heat output Δt 30° (W)
300	230	0,9	0,8	**42,3**	**22,3**
350	280	1,1	0,9	**48,9**	**25,8**
400	330	1,2	0,9	**55,5**	**29,2**
450	380	1,4	1,1	**61,9**	**32,6**
500	430	1,5	1,1	**68,3**	**35,8**
550	480	1,7	1,2	**74,7**	**39,2**
600	530	1,8	1,2	**81,1**	**42,4**
750	680	2,2	1,5	**100,0**	**52,1**
800	730	2,4	1,6	**106,3**	**55,3**
900	830	2,6	1,7	**118,9**	**61,7**
1000	930	2,9	1,9	**131,5**	**68,0**
1100	1030	3,1	2,1	**144,1**	**74,5**
1200	1130	3,5	2,2	**156,6**	**80,7**
1500	1430	4,4	2,7	**194,3**	**99,6**
1800	1730	5,3	3,1	**232,3**	**118,5**
2000	1930	5,8	3,4	**257,8**	**131,7**
2200	2130	6,3	3,8	**283,5**	**145,1**
2500	2430	7,1	4,2	**322,3**	**165,5**
2800	2730	7,8	4,7	**361,6**	**186,2**
3000	2930	8,4	5,0	**388,1**	**200,3**

5 columns

Height H (mm)	Tappings centre I (mm)	Empty weight (kg)	Water content (l)	Heat output Δt 50° (W)	Heat output Δt 30° (W)
300	230	1,2	1,0	**51,9**	**27,4**
350	280	1,4	1,1	**59,6**	**31,4**
400	330	1,6	1,2	**67,2**	**35,3**
450	380	1,7	1,3	**74,7**	**39,2**
500	430	1,9	1,4	**82,2**	**43,0**
550	480	2,1	1,5	**89,6**	**46,8**
600	530	2,3	1,6	**97,0**	**50,5**
750	680	2,8	1,8	**119,0**	**61,5**
800	730	3,1	1,9	**126,3**	**65,2**
900	830	3,3	2,1	**140,8**	**72,4**
1000	930	3,7	2,3	**155,4**	**79,5**
1100	1030	4,1	2,5	**169,9**	**88,4**
1200	1130	4,4	2,7	**184,5**	**94,0**
1500	1430	5,5	3,3	**228,4**	**115,7**
1800	1730	6,5	3,9	**272,9**	**137,3**
2000	1930	7,2	4,3	**302,9**	**152,9**
2200	2130	7,9	4,7	**333,3**	**168,8**
2500	2430	9,0	5,3	**379,7**	**193,3**
2800	2730	10,1	5,9	**427,1**	**218,5**
3000	2930	10,8	6,2	**459,3**	**235,7**

6 columns

Height H (mm)	Tappings centre I (mm)	Empty weight (kg)	Water content (l)	Heat output Δt 50° (W)	Heat output Δt 30° (W)
300	230	1,5	1,1	**62,3**	**32,7**
350	280	1,7	1,2	**71,7**	**37,6**
400	330	1,9	1,3	**81,0**	**42,3**
450	380	2	1,5	**90,2**	**46,0**
500	430	2,3	1,6	**99,4**	**51,7**
550	480	2,4	1,7	**108,5**	**55,0**
600	530	2,7	1,8	**117,5**	**60,9**
750	680	3,4	2,2	**144,4**	**74,4**
800	730	3,8	2,3	**153,3**	**78,8**
900	830	4,0	2,5	**171,0**	**87,5**
1000	930	4,4	2,8	**188,6**	**96,1**
1100	1030	4,8	3,1	**206,2**	**105,1**
1200	1130	5,2	3,3	**223,8**	**113,9**
1500	1430	6,5	4,0	**276,3**	**140,4**
1800	1730	7,7	4,7	**328,9**	**166,8**
2000	1930	8,6	5,2	**364,0**	**184,7**
2200	2130	9,5	5,7	**399,2**	**202,8**
2500	2430	10,8	6,4	**452,4**	**229,9**
2800	2730	12,1	7,2	**505,9**	**257,2**
3000	2930	13,3	7,7	**541,9**	**275,8**

DL Radiators Srl
part of De'Longhi Industrial
T. +39 0432 705 511
F. +39 0432 705 550
info.dlr@dlradiators.it

Head office
Via Lodovico Seitz, 47
31100 Treviso — Italy

Moimacco
Strada Statale 54, 21
33040 Moimacco
Udine — Italy

Fossalta di Piave
Via delle Industrie, 2
30020 Fossalta di Piave
Venice — Italy

www.dlradiators.com

RADIATORS
ITALIAN PREMIUM HEATING

COD. 5800007500 — 02.2017

RADIATORS
ITALIAN PREMIUM HEATING

ENG

MULTICOLONNA

DL Radiators would like
to offer his customers
top efficiency, realibility and beauty

MADE IN ITALY

10 YEARS WARRANTY

MULTICOLONNA

A complete range

The range of DL Radiators Multicolonna radiators covers all heat rating requirements with a wide range of heights (300 to 3000 mm), number of columns (2 to 6) and element configurations.

As well as a complete range, DL Radiators products can also be customised with dedicated finishes and colours. Customers can communicate the RAL number, or contact DL Radiators to discover which finishes best satisfy their needs.

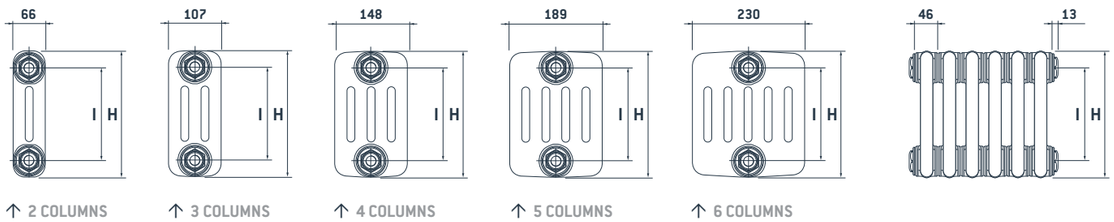

H = height **I = tappings centre = (H – 70 mm)** See table on last page for height (H) and tappings centre (I) values.

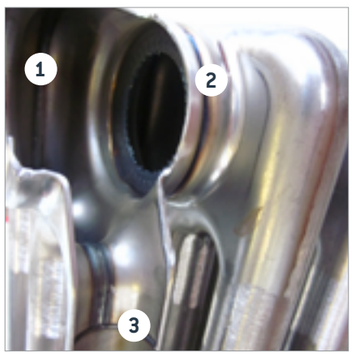

Reliability

All DL Radiators Multicolonna radiators are verified to guarantee a perfectly sealed installation.

— The welding technologies used ensure the heating system is completely **clean**.
— The exclusive head-to-tube discharge **welding** and laser welding of the head without filler material avoids corrosion and welding residues upstream which could damage and clog the boiler heat exchangers.
— There are also no welding beads to impair the **finish**.

1. **Head welding**
2. **Element welding**
3. **Head/tube welding**

Ease of installation

DL Radiators Multicolonna radiators can be customised according to the specific needs of the heating system o simplify and speed up installation and avoid the risk of leaks.
Below are a number of connection alternatives, showing the diameters of the connections available on Multicolonna radiators. .

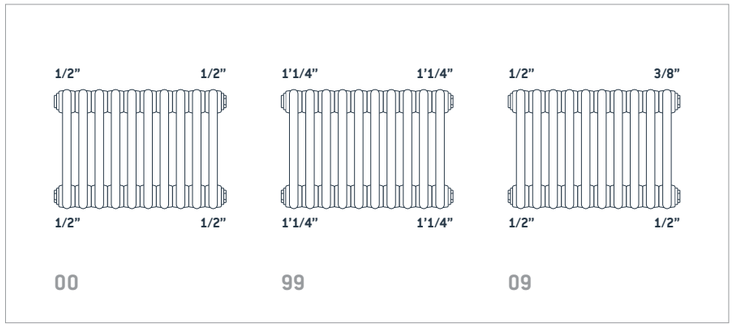

Below are a number of possible configurations showing the type of connections available.

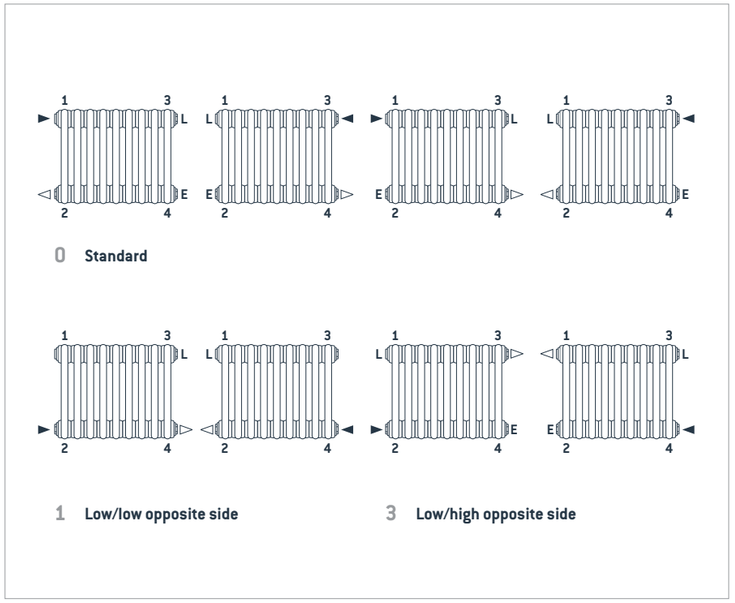

The complete range of alternatives are available in the professional section of the **www.dlradiators.it** website.

Multicolonna radiators can be customised, see the details on the website to identify the correct code.

Clinic Multicolonna

Multicolonna Clinic is particularly easy to clean thanks to the bigger distance between elements (tappings centre 66 mm) and is recommended for places where a healthy environment is a fundamental requirement.

Multicolonna Integrato (supplied with valve)
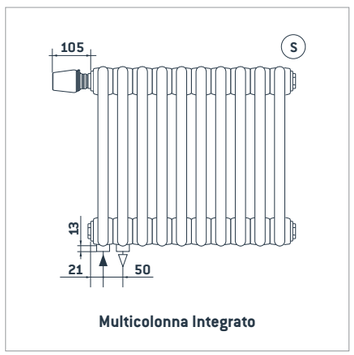
The Multicolonna Integrato radiator is supplied as standard with a thermostatic valve. Multicolonna Integrato further simplifies the installer's work, in respect of standards and regulations on replacement: Where technically compatible, install low thermal inertia thermostatic valves (or other modulating flow regulation device).